Parts Breakdown

LXDT08

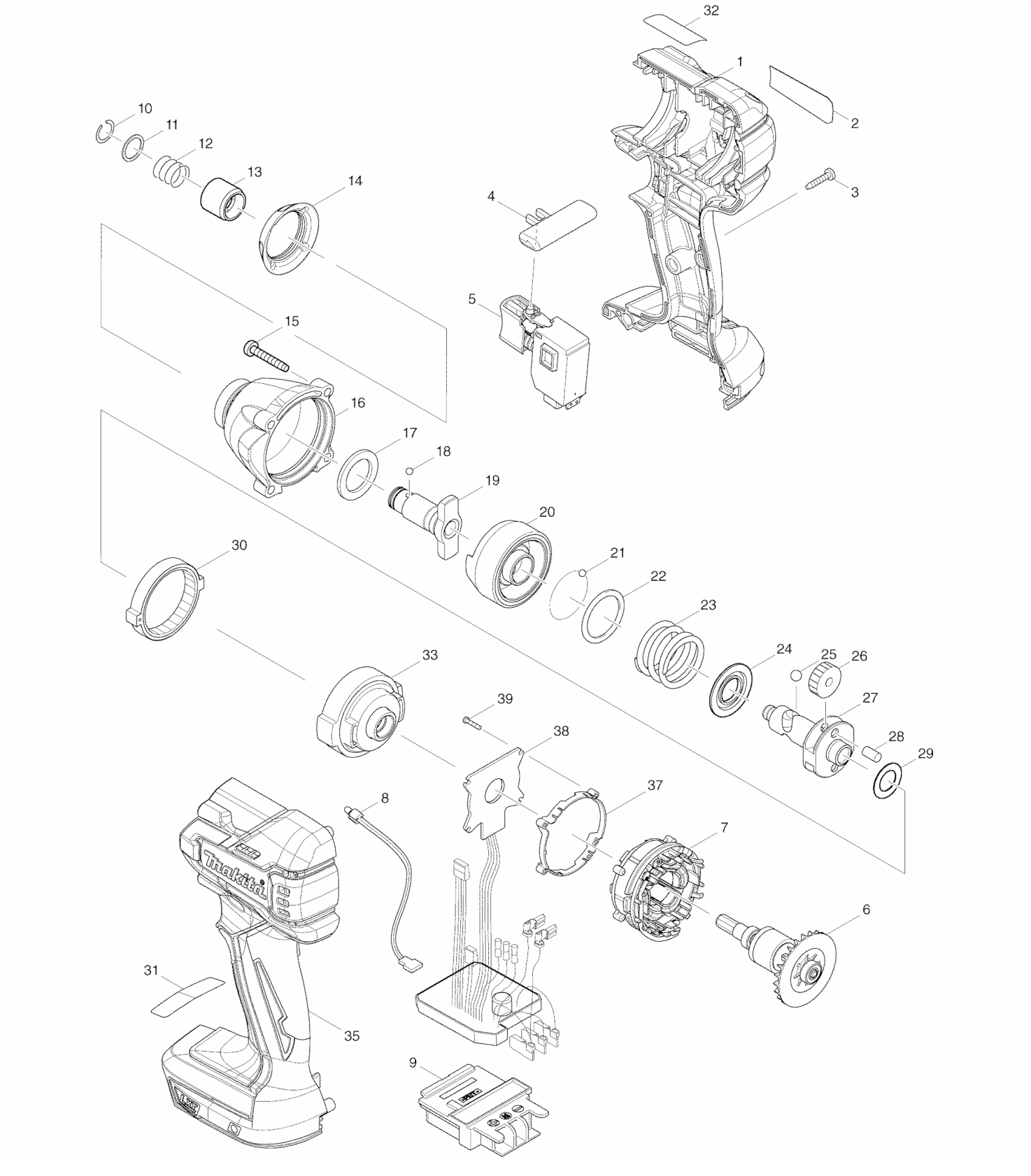

Parts Breakdown

LXDT08

Products with multiple versions are listed in subsiding order with the newest version on top not indented

Fig #	Part ID	Part Name	Quantity
1	187455-7	HOUSING SET, LXDT08	1
2	897319-4	NAME PLATE, LXDT08	1
3	266429-2	TAPPING SCREW 3X16, BCL180ZW	8
4	419041-9	F/R CHANGE LEVER, LXDT08	1
5	650689-0	SWITCH C3JW-2B, LXPH05	1
6	619303-7	ROTOR, LXDT08	1
7	629959-8	STATOR, LXDT08	1
8	620163-2	LED CIRCUIT, LXPH05	1
9	643860-3	TERMINAL, LXPH05	1
10	231951-8	RING SPRING 11, LXDT01	1
11	267085-1	FLAT WASHER 12, LXDT08	1
12	233005-7	COMP.SPRING 13,LXDT01	1
13	324420-7	SLEEVE, LXDT08	1
14	424513-1	BUMPER, LXDT08	1
15	266374-1	TAPPING SCREW 4X25, GA7021	4
16	141633-3	HAMMER CASE CPL., LXDT08	1
17	261151-6	NYLON WASHER 19, LXDT04	1
18	216001-0	STEEL BALL 3.5, LXDT08	2
19	326188-1	ANVIL M, LXDT08	1
20	326110-8	HAMMER, LXDT08	1
21	216001-0	STEEL BALL 3.5, LXDT08	24
22	267175-0	FLAT WASHER 24, LXDT08	1
23	233430-2	COMPRESSION SPRING 24, LXDT08	1
24	267766-7	CUP WASHER 14, LXDT08	1
25	216011-7	STEEL BALL 5.6, LXDT08	2
26	226336-1	SPUR GEAR 22, LXDT08	2
27	326109-3	SPINDLE, LXDT08	1
28	256253-1	PIN 5, LXDT08	2
29	267212-0	FLAT WASHER 12, LXDT08	1
30	227279-0	INTERNAL GEAR 51, LXDT08	1
31	898928-2	CAUTION LABEL, LXDT08	1
32	898999-9	CAUTION LABEL, LXDT08	1
33	141693-5	INTERNAL GEAR CASE CPL., LXDT08	1
35	187455-7	HOUSING SET, LXDT08	1
37	687464-1	SUPPORT, LXPH05	1
38	620161-6	CONTROLLER, LXDT08	1
39	266786-8	+ PAN HEAD TAPPING SCREW 2X10, LXPH05	4
	251314-2	SCREW M4X12, LXPH03	1
	346449-3	BELT HOOK SILM & SHORT FOR CORDLESS TOO	1
	***DC18RA	N/A	1
	BL1830	18V LXT LITHIUM-ION BATTERY	2
	195324-8	BATTERY BL1830	
	450128-8	BATTERY COVER FOR 18V/14.4V LI-ION BATTERY	1
	824774-7	PLASTIC TOOL CASE, BDF452,BTD142HW	1