Parts Breakdown

LC1230

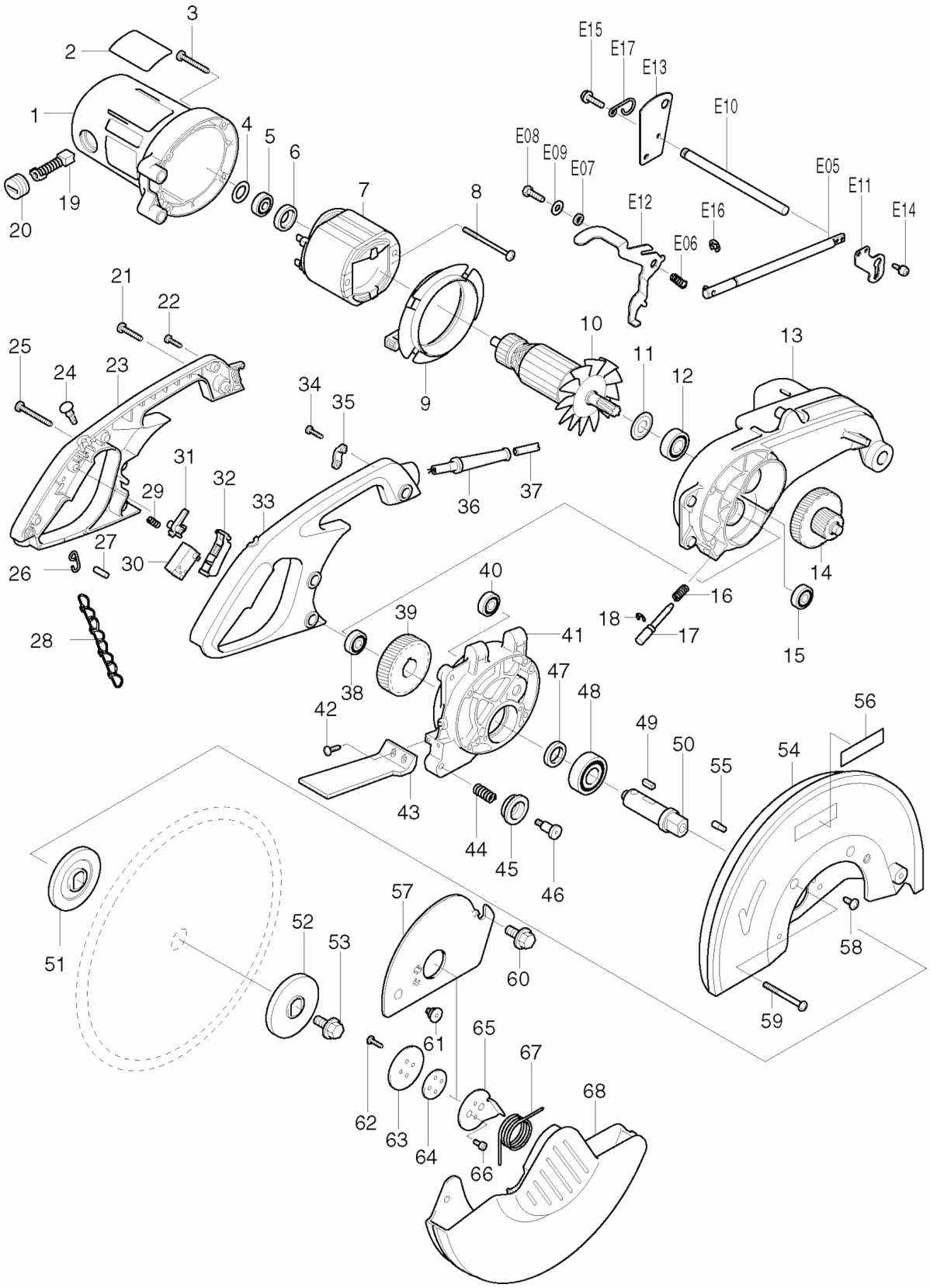

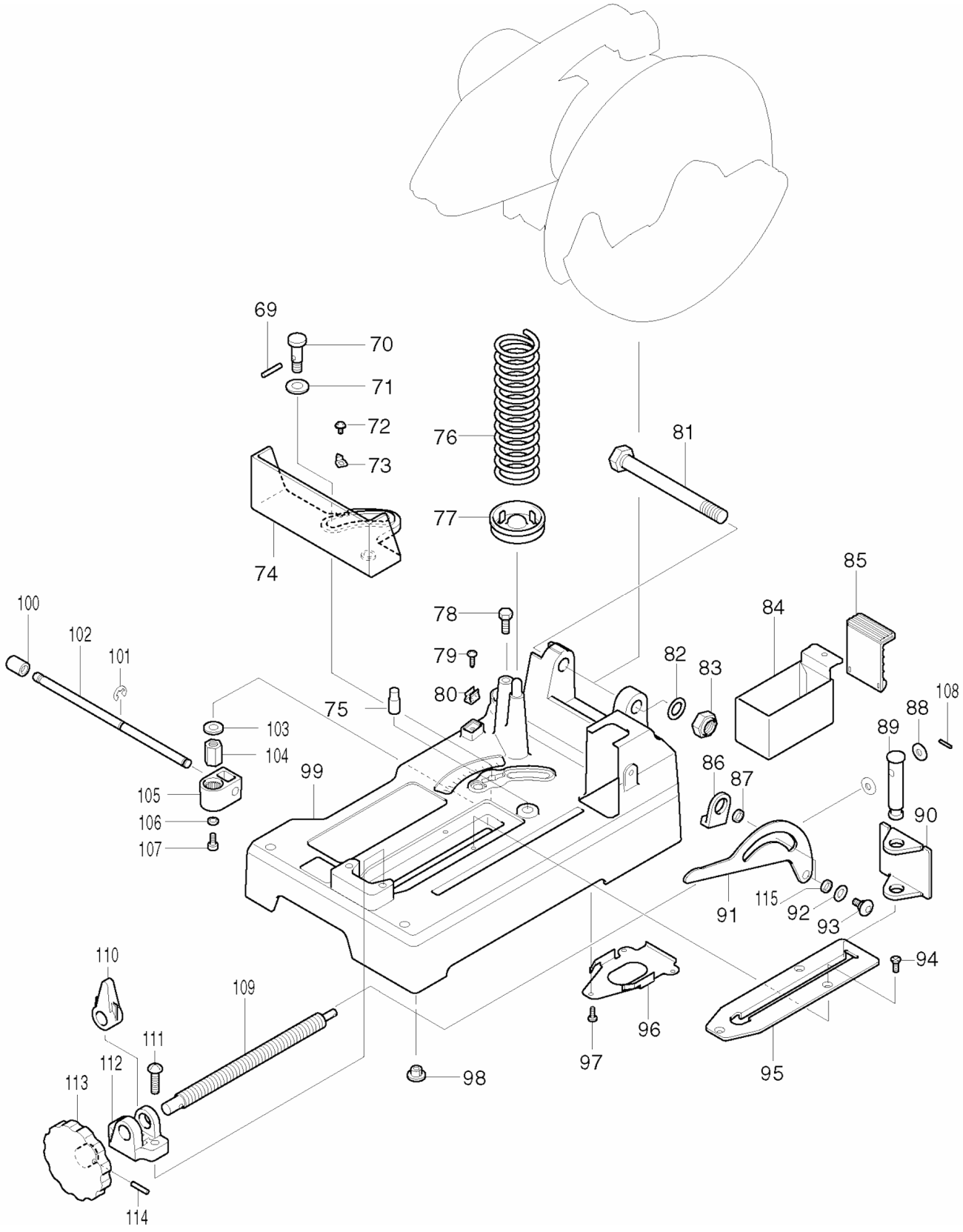
69
70
71
72
73
74
75
76
77
78
79
80
81
82
83
84
85
86
87
88
89
90
91
92
93
94
95
96
97
98
99
100
101
102
103
104
105
106
107
108
109
110
111
112
113
114
115

Products with multiple versions are listed in subsiding order with the newest version on top not indented

Fig #	Part ID	Part Name	Quantity
1	151625-4	MOTOR HOUSING COMPLETE, LC1230	1
2	851537-8	NAME PLATE, LC1230	1
3	266028-0	TAPPING SCREW BIND CT 5X40, LC1230	4
4	253749-3	F. WASHER 16, 2107F	1
5	210042-8	BALL BEARING 629LLB, LXDG01	1
	211056-0	B. BEARING 629LLB, 4101RH	
	210053-3	BALL BEARING 629LLB,4200NH	
6	681633-6	INSULATION WASHER, LS1211	1
7	636166-6	FIELD 115V, LC1230	1
8	266059-9	T. SCREW, FLANGE 5X75,2414B	2
9	415475-4	BAFFLE PLATE, LC1230	1
10	516571-2	ARMATURE ASS'Y 115V, LC1230	1
11	267714-6	WASHER 15, 2414B	1
12	211206-7	B. BEARING 6202LLB, 5007F	1
13	316626-1	GEAR HOUSING (L), LC1230	1
14	226122-0	GEAR COMPLETE 16-44, LC1230	1
15	211064-1	B. BEARING 6000, 2414B	1
16	231418-6	COMP. SPRING 9, LC1230	1
17	322678-2	SHAFT LOCK, LC1230	1
18	961014-3	STOP RING E-8, BSS501	1
19	CB203	CARBON BRUSH SET, 194991-6	1
	194991-6	CARBON BRUSH SET, 194991-6	
	191953-5	CARBON BRUSH SET CB-203, LS1211	
20	643700-5	BRUSH HOLDER CAP, GA7021	2
21	266032-9	TAPPING SCREW 5X30, 5277NB	1
22	265995-6	TAPPING SCREW 4X18, BO4556K	4
23	182628-7	HANDLE SET, 2414NB	1
24	411478-6	SWITCH BUTTON, LS1011	1
25	266033-7	TAPPING SCREW 5X50, 5037NB	2
26	281207-9	HANGER, 2414B	1
27	256012-3	PIN 6, 2414NB	1
28	282016-9	CHAIN, 2414NB	1
	282010-1	CHAIN, 2414B-T1	
29	231397-8	COMPRESSION SPRING 4, 2414B	1
30	651922-3	SWITCH, HM1303B	1
31	415366-9	SWITCH LOCK, 2414B	1
32	152463-7	SWITCH LEVER COMPLETE, 2414B	1
33	182628-7	HANDLE SET, 2414NB	1
34	265995-6	TAPPING SCREW 4X18, BO4556K	2
35	687052-4	STRAIN RELIEF, 5007F	1
36	682505-8	CORD GUARD, 5007F	1
37	664463-0	CORD (2X14X8 SJ), 5007F	1
38	211064-1	B. BEARING 6000, 2414B	1
39	226427-8	HELICAL GEAR 38, LC1230	1
40	211061-7	B. BEARING 6000LLB, 6222DWE	1
41	317148-4	GEAR HOUSING (R), LC1230	1
42	266034-5	TAPPING SCREW 4X16, LS1016L	2
43	416869-6	PROTECTOR, LC1230	1
44	231226-5	COMP. SPRING 11, 2040	1
45	415474-6	BLADE GUIDE, LC1230	1
46	266030-3	SCREW M6, LC1230	1
47	257139-2	RING 20, LC1230	1
48	211329-1	BALL BEARING 6204DDW, LC1230	1
49	254229-2	KEY 5, HR4000C	1
50	323828-2	SPINDLE, LC1230	1
51	224308-0	INNER FLANGE 70, LC1230	1
52	224379-7	OUTER FLANGE 69 LC1230	1
	224309-8	OUTER FLANGE 70, LC1230	

53	265414-2	HEX FLANGE H.BOLT M10X20,LC1230	1
54	183089-4	BLADE CASE SET, LC1230	1
55	256405-4	PIN 6-7, 4303C	2
56	819064-1	MAKITA MARK, 5402NA	1
57	344737-2	CENTER COVER, LC1230	1
58	266035-3	TAPPING SCREW BIND CT5X12, 9031	2
59	911383-2	P.H. SCREW M6X60, LS1030	4
60	265414-2	HEX FLANGE H.BOLT M10X20,LC1230	1
61	265121-7	FLAT HEAD SCREW M6, 2414NB	1
	265020-3	FLAT HEAD SCREW M6, 2414NB	
62	266034-5	TAPPING SCREW 4X16, LS1016L	2
63	344735-6	CENTER SUPPORT, LC1230	1
64	344734-8	CENTER WASHER, LC1230	1
65	344736-4	CENTER PLATE, LC1230	1
66	922107-1	H.S.H. BOLT M4X8, 4329K	2
67	231643-9	TORSION SPRING 38, LC1230	1
68	317152-3	SAFETY COVER, LC1230	1
69	256098-7	PIN 5, LC1230	1
70	323882-6	COLLARD SHAFT 12, LC1230	1
71	253843-1	F. WASHER 12, LC1230	1
72	911103-4	P.H. SCREW M4X6, 9217SPC	1
73	816128-2	POINTER, LS1013	1
74	310086-9	VISE, LC1230	1
75	256453-3	PIN 12, LC1230	1
76	233103-7	COMPRESSION SPRING 45, LC1230	1
77	165066-8	SPRING HOLDER, 2414B	1
78	265412-6	HEX. BOLT M8X20, LS1013	1
79	266034-5	TAPPING SCREW 4X16, LS1016L	1
80	232075-3	LEAF SPRING, LS1016L	1
81	265413-4	HEX BOLT M16, LC1230	1
82	253771-0	F. WASHER 16, LS1011	1
83	252044-8	HEX LOCK NUT M16-24, LS1020	1
84	344740-3	DUST BOX, LC1230	1
85	421671-4	RUBBER PAD, LC1230	1
86	421670-6	CUSHION, LC1230	1
87	257222-5	RING 8, LC1230	1
88	253731-2	F. WASHER 8, 2414NB	2
89	268040-6	PIN 16, LC1230	1
90	344118-0	VISE PLATE, LC1230	1
91	346633-0	LINK PLATE, LC1230	1
	344738-0	LINK PLATE, LC1230	
92	267236-6	FLAT WASHER 8, LC1230	2
	253139-0	F. WASHER 8, 6510LVR	
93	265089-7	PAN HEAD SCREW M6, LC1230	2
	251331-2	P.H. SCREW M6, LS1020	
94	912212-2	C.S.H. SCREW M5X12, 5007NK	3
95	344119-8	GUIDE PLATE, LC1230	1
96	344739-8	UNDER PLATE, LC1230	1
97	266026-4	TAPPING SCREW 4X12, LS1016L	3
98	286212-1	CAP 20, 2705	5
99	151623-8	BASE COMPLETE, LC1230	1
100	286236-7	CAP 16, LXSL01	1
101	961014-3	STOP RING E-8, BSS501	2
102	323883-4	LEVER ROD 10, LC1230	1
103	253024-7	F. WASHER 10, LS1016L	1
104	252161-4	HEX NUT M10-17, LC1230	1
105	151622-0	LEVER HOLDER COMPLETE, LC1230	1
106	941152-7	F. WASHER 6, HM1500	1
107	265381-1	HEX. BOLT M6X16, LXSL01	1
108	951063-8	SPRING PIN 3-16, LC1230	1
109	322679-0	VISE SCREW, LC1230	1

110	322209-7	VISE NUT, 2414B P/VISE ASSY	1
111	911451-1	P.H. SCREW M8X30, 2414NB	2
112	311949-2	SCREW GUIDE, 2414NB	1
113	271072-4	HANDLE 100, LC1230	1
	271062-7	HANDLE 100, LC1230	
114	951166-8	SPRING PIN 5-24, HR5210C	1
115	257157-0	RING 8, LS1020, M242, (T2)	1
	782210-8	SOCKET WRENCH 17,2414B	1
	192219-6	SAFETY GOGGLES	1
	A-90532	12 C.T. BLADE, 60T, BULK	1
	A-90897	12 C.T.BLADE, 60T,LC1230,T1	
	411478-6	SWITCH BUTTON, LS1011	2
	810154-3	N/A	1