Parts Breakdown

EM2650UH

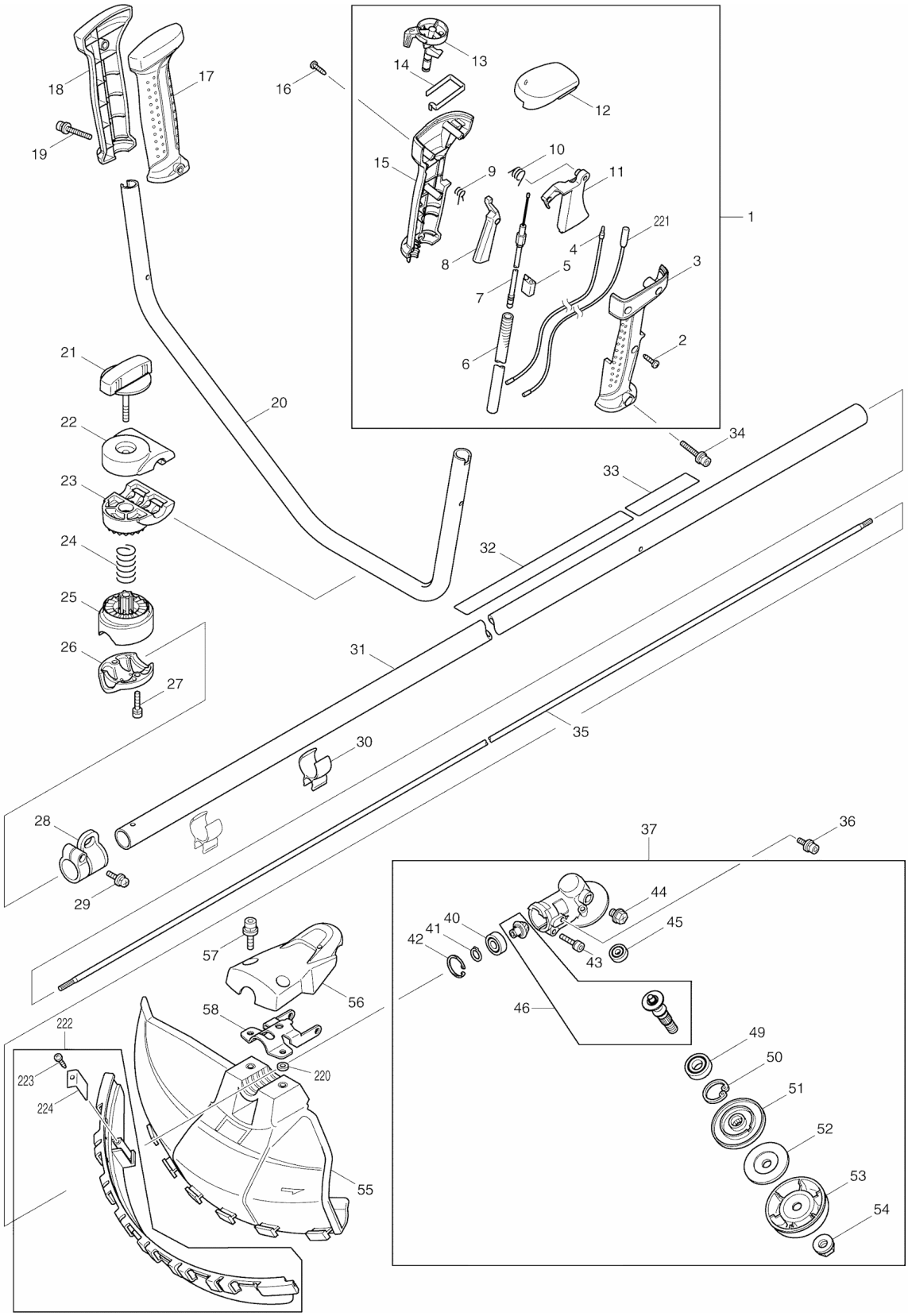

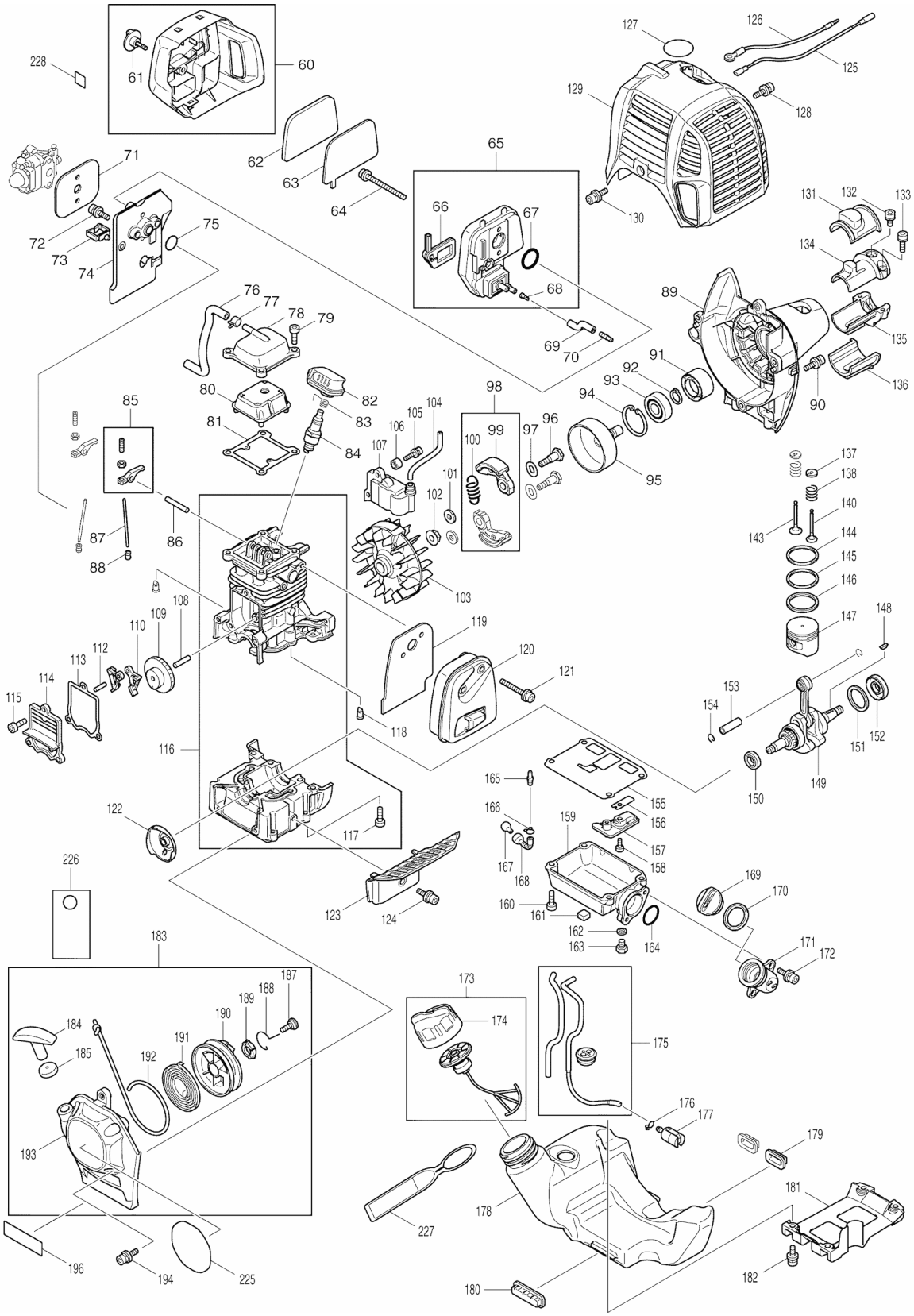
228
61
60
62
63
64
65
66
67
68
69
70
71
72
73
74
75
76
77
78
79
80
81
82
83
84
85
86
87
88
89
90
91
92
93
94
95
96
97
98
99
100
101
102
103
104
105
106
107
108
109
110
112
113
114
115
116
117
118
119
120
121
122
123
124
125
126
127
128
129
130
131
132
133
134
135
136
137
138
140
143
144
145
146
147
148
149
150
151
152
153
154
155
156
157
158
159
160
161
162
163
164
165
166
167
168
169
170
171
172
173
174
175
176
177
178
179
180
181
182
183
184
185
187
188
189
190
191
192
193
194
196
225
226
227

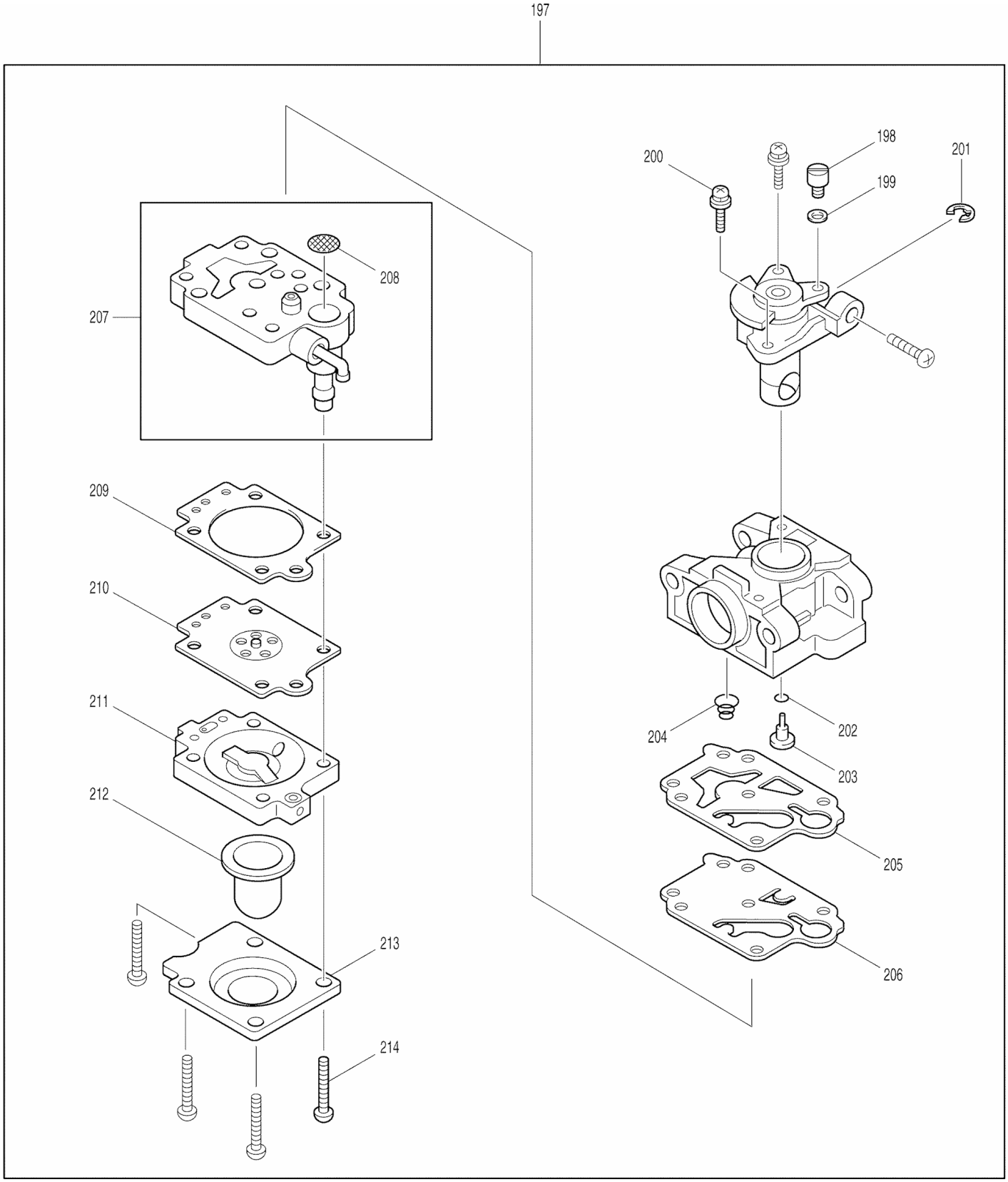
197
198
199
200
201
202
203
204
205
206
207
208
209
210
211
212
213
214

Products with multiple versions are listed in subsiding order with the newest version on top not indented

Fig #	Part ID	Part Name	Quantity
1	125775-1	CONTROL LEVER ASS'Y, EM2650UH	1
2	266326-2	TAPPING SCREW PT 4X18, 5007MG	3
3	188656-0	LEVER CASE SET, EM2650UH	1
4	638705-8	LEAD UNIT, EM2650UH	1
5	451081-1	CABLE HOLDER, EM2650UH	1
6	452005-0	CORRUGATE TUBE, EM2650UH	1
7	168570-6	CONTROL CABLE, EM2650UH	1
8	451083-7	LOCK OFF LEVER, EM2650UH	1
9	233541-3	TORSION SPRING 7, EM2650LH	1
10	233540-5	TORSION SPRING 11, EM2650LH	1
11	451084-5	THROTTLE LEVER, EM2650UH	1
12	451085-3	SWITCH COVER, EM2650UH	1
13	451082-9	SWITCH LEVER, EM2650UH	1
14	232251-9	LEAF SPRING, EM2650LH	1
15	188656-0	LEVER CASE SET, EM2650UH	1
16	266326-2	TAPPING SCREW PT 4X18, 5007MG	1
17	188659-4	GRIP SET, EM2650UH	1
18	188659-4	GRIP SET, EM2650UH	1
19	911256-9	P.H. SCREW M5X35, 6300LR	1
20	331862-8	HANDLE 19, EM2650UH	1
21	168796-0	N/A	1
	168524-3	KNOB 57, EM2650UH	
22	318429-9	HANDLE CLAMP, EM2650UH	1
23	318428-1	HANDLE HOLDER, EM2650UH	1
24	233202-5	COMPRESSION SPRING 20, HR2400	1
25	318427-3	PIPE HOLDER, EM2650UH	1
26	318426-5	PIPE CLAMP, EM2650UH	1
27	922241-7	H.S.H. BOLT M5X25, AN451-T2	2
28	195143-2	HAGER SET, EM2650LH	1
29	911233-1	P.H. SCREW M5X20, TW1000	1
30	451526-9	WIRE CLAMP, EM2650UH	2
31	140431-2	SHAFT PIPE CPL., EM2650LH	1
32	890280-4	CAUTION LABEL, EM2650UH	1
33	819312-8	MAKITA LOGO LABEL, EM2650LH	1
34	911256-9	P.H. SCREW M5X35, 6300LR	1
35	324893-4	SHAFT, EM2650LH	1
36	922218-2	H.S.H. BOLT M5X14 WITH WR, EM2650LH	2
37	125556-3	GEAR CASE ASS'Y, EM2650UH	1
40	210049-4	BALL BEARING 609ZZ, EM2650LH	1
41	961005-4	RETAINING RING S-9, LXDG01	1
42	962103-7	RETAINING RING R-24, AN611	1
43	922241-7	H.S.H. BOLT M5X25, AN451-T2	1
44	265590-2	+ HEX. BOLT M8X10 , EM2650LH	1
46	188902-1	CUTTER SHAFT SET, EM2650LH	1
49	210115-7	BALL BEARING 6001LLU, EM2650LH	1
50	962106-1	RETAINING RING R-28,GD0800C	1
51	331861-0	RECEIVE WASHER, EM2650LH	1
52	346084-7	CLAMP WASHER, EM2650UH	1
53	168526-9	CUP, EM2650UH	1
54	264025-0	HEX. NUT M10-1.25LH, EM2650UH	1
55	452260-4	PROTECTOR, EM2650UH	1
57	266575-1	HEX. HEAD BOLT M6X30, EM2650LH	2
58	346073-2	PROTECTOR CLAMP, EM2650LH	1
60	126202-1	CLEANER COVER ASS'Y, EM2650LH	1
	125746-8	CLEANER COVER ASS'Y, EM2650LH	
61	265791-2	THUMB SCREW M4, EM2650LH	1
62	443171-4	AIR CLEANER ELEMENT, EM2650LH	1
63	443169-1	AIR CLEANER ELEMENT, EM2650LH	1

64	266618-9	H.S. BUTTON HEAD BOLT M5X60, EM2650LH	2
65	126198-6	CLEANER PLATE ASS'Y, EM2650LH	1
	126004-5	CLEANER PLATE ASS'Y, EM2650LH	
66	162346-3	SEPARATOR PLATE, EM2650LH	1
	162324-3	SEPARATOR PLATE, EM2650LH	
67	213540-1	O RING 15, EM2650LH	1
68	424316-3	CHECK VALVE, EM2650LH	2
	424316-3	CHECK VALVE, EM2650LH	
69	422099-9	PIPE, EM2650LH	1
	422062-2	PIPE, EM2650LH	
70	325665-0	JOINT PIPE, EM2650LH	1
71	442153-3	CARBURETOR GASKET, EM2650LH	1
72	266787-6	H.S.H BOLT M5X18 W/WR, EM2650LH	2
	922228-9	H.S.H. BOLT M5X18 WITH WR, EM2650LH	
73	451825-9	CLAMP, EM2650LH	1
74	451729-5	CLEANER COVER ASS'Y, EM2650LH	1
75	213547-7	O-RING 12, EM2650LH	1
76	422109-2	N/A	1
	422055-9	BREATHER PIPE, EM2650LH	
77	345918-1	HOSE CLAMP, EM2650LH	1
78	318745-9	ROCKER COVER OUTER, EM2650LH	1
79	922222-1	H.S.H. BOLT M5X16, HM1211B	4
80	453860-3	ROCKER COVER INNER, EM2650LH	1
	452795-5	ROCKER COVER INNER, EM2650LH	
81	162304-9	ROCKER COVER GASKET, EM2650LH	1
82	424302-4	PLUG CAP, EM2650LH	1
83	324891-8	PLUG CAP SPRING, EM2650LH	1
84	168534-0	SPARK PLUG CMR4A, EM2650LH	1
85	125554-7	ROCKER ARM ASS'Y, EM2650LH	2
86	256200-2	PIN 5, 2704	1
87	256865-0	ROD 2.5, EM2650LH	2
88	325668-4	SPRING RETAINER, EM2650LH	2
89	451735-0	CLUTCH CASE, EM2650LH	1
90	922228-9	H.S.H. BOLT M5X18 WITH WR, EM2650LH	3
91	450569-8	SPACER, EM2650LH	1
92	961052-5	RETAINING RING S-12, LS1016L	1
93	210111-5	BALL BEARING 6201LLU, EM2650LH	1
94	962151-6	RETAINING RING R-32, 9005B	1
95	168609-5	CLUTCH DRUM, EM2650LH	1
96	266457-7	SHOULDER HEX. BOLT M6X25, EM2650LH	2
97	267817-6	WASHER 8, EM2650LH	2
98	126135-0	CLUTCH ASS'Y, EM2650LH	1
	125518-1	CLUTCH ASS'Y, EM2650LH	
99	168498-8	CLUTCH SHOE, EM2650LH	2
100	231881-3	TENSION SPRING 7, EM2650LH	1
	231858-8	TENSION SPRING 6, EM2650LH	
101	267812-6	WASHER 6, EM2650LH	2
102	264039-9	FRANGE NUT, EM2650LH	1
103	318569-3	FLYWHEEL, EM2650LH	1
104	444021-6	TUBE, EM2650LH	1
105	266602-4	HEX. SOCKET HEAD BOLT M4X20, EM2650LH	2
106	452049-0	SPACER, EM2650LH	2
107	168559-4	IGNITION COIL, EM2650LH	1
108	268238-5	PIN 5, EM2650LH	1
109	125552-1	CAM GEAR ASS'Y, EM2650LH	1
110	313169-4	CAM LIFTER, EM2650LH	2
112	268239-3	PIN 4, EM2650LH	1
113	162274-2	CAM GEAR COVER GASKET, EM2650LH	1
114	318443-5	CAM GEAR COVER, EM2650LH	1
115	922222-1	H.S.H. BOLT M5X16, HM1211B	3
116	135478-9	CYLINDER BLOCK ASS'Y, EM2650LH	1

117	922222-1	H.S.H. BOLT M5X16, HM1211B	6
118	424201-0	CHECK VALVE, EM2650LH	2
119	346331-6	MUFFLER GASKET, EM2650LH	1
120	168554-4	EXHAUST MUFFLER, EM2650LH	1
121	266440-4	HEX SOCKET HEAD BOLT M5X40, EM2650LH	2
122	168483-1	PULLEY, EM2650LH	1
123	451731-8	MUFFLER PLATE, EM2650LH	1
124	922218-2	H.S.H. BOLT M5X14 WITH WR, EM2650LH	1
125	638707-4	LEAD UNIT, EM2650LH	1
126	638708-2	LEAD UNIT, EM2650LH	1
127	808633-3	4 STROKE INDICATION LABEL, EM2650LH	1
128	922218-2	H.S.H. BOLT M5X14 WITH WR, EM2650LH	1
129	453266-5	CYLINDER COVER, EM2650LH	1
	451734-2	CYLINDER COVER, EM2650LH	
130	922218-2	H.S.H. BOLT M5X14 WITH WR, EM2650LH	1
131	424082-2	BUFFER RUBBER, EM2650LH	1
132	922211-6	HEX. SOCKET HAD BOLT M5X12, EM2650LH	1
133	922226-3	H. S. H. BOLT M5X18, LS1016L	2
134	318249-1	PIPE HOLDER, EM2650LH	1
135	318250-6	PIPE HOLDER, EM2650LH	1
136	424083-0	BUFFER RUBBER, EM2650LH	1
137	424200-2	SPACER, EM2650LH	2
138	234108-0	COMPRESSION SPRING 9, EM2650LH	2
140	325669-2	EXHAUST VALVE, EM2650LH	1
143	325670-7	INTAKE VALVE, EM2650LH	1
144	257298-2	PISTON RING (TOP), EM2650LH	1
145	257299-0	PISTON RING (SECOND), EM2650LH	1
146	257300-1	PISTON RING 34, EM2650LH	1
147	318441-9	PISTON, EM2650LH	1
148	254040-2	WOODRUFF KEY 3, EM2650LH	1
149	126204-7	CRANK SHAFT ASS'Y, EM2650LH	1
	135481-0	CRANK SHAFT ASS'Y, EM2650LH	
150	213148-1	OIL SEAL 10, EM2650LH	1
	213148-1	OIL SEAL 10, EM2650LH	
151	267400-9	FLAT WASHER 23, EM2650LH	1
	267400-9	FLAT WASHER 23, EM2650LH	
152	213147-3	OIL SEAL 12, EM2650LH	1
	213147-3	OIL SEAL 12, EM2650LH	
153	257781-9	PISTON PIN, EM2650LH	1
154	233976-8	CLIP, EM2650LH	2
155	162345-5	OIL CASE GASKET, EM2650LH	1
	162323-5	OIL CASE GASKET, EM2650LH	
156	346083-9	LEAD VALVE, EM2650LH	1
157	318910-0	RETAINER PLATE, EM2650LH	1
	318590-2	RETAINER PLATE, EM2650LH	
158	922112-8	H.S.H. BOLT M4X10, BO5001	1
159	318588-9	OIL CASE, EM2650LH	1
160	922222-1	H.S.H. BOLT M5X16, HM1211B	4
161	424344-8	DAMPER, EM2650LH	1
162	346305-7	GASKET, EM2650LH	1
163	266611-3	HEX BOLT M6X8, EM2650LH	1
164	213548-5	O-RING 20, EM2650LH	1
165	325665-0	JOINT PIPE, EM2650LH	1
166	282020-8	HOSE CLAMP, EM2650LH	1
167	325666-8	OIL WEIGHT, EM2650LH	1
168	424301-6	OIL TUBE, EM2650LH	1
169	452047-4	OIL CAP, EM2650LH	1
170	424343-0	GASKET, EM2650LH	1
171	452048-2	OIL PIPE, EM2650LH	1
172	922218-2	H.S.H. BOLT M5X14 WITH WR, EM2650LH	2
173	125728-0	FUEL TANK CAP ASS'Y, EM2650LH	1

174	451739-2	FUEL TANK CAP, EM2650LH	1
175	168755-4	TUBE CPL., EM2650LH	1
	168555-2	TUBE CPL., EM2650LH	
176	282020-8	HOSE CLAMP, EM2650LH	1
177	163518-3	GASOLINE FILTER, EM2650LH	1
178	452249-2	FUEL TANK, EM2650LH	1
179	424080-6	BUFFER RUBBER, EM2650LH	2
180	424081-4	BUFFER RUBBER, EM2650LH	1
181	451737-6	TANK GUARD, EM2650LH	1
182	922218-2	H.S.H. BOLT M5X14 WITH WR, EM2650LH	4
183	195308-6	RECOIL STARTER SET, EM2650LH	1
184	424319-7	STARTER KNOB, EM2650LH	1
185	424359-5	DAMPER, EM2650LH	1
187	266585-8	TAPPING SCREW 5X12, EM2650LH	1
188	325923-4	SWING ARM, EM2650LH	1
189	451938-6	COLLAR, EM2650LH	1
190	451937-8	REEL, EM2650LH	1
191	232258-5	SPIRAL SPRING, EM2650LH	1
192	444023-2	STARTER ROPE, EM2650LH	1
193	451733-4	STARTER CASE, EM2650LH	1
194	922223-9	H.S.H. BOLT M5X16 WITH WR, EM2650LH	4
196	816565-0	MAKITA LOGO LABEL, EM2650LH	1
197	168762-7	CARBURETOR, EM2650LH	1
	168591-8	CARBURETOR, EM2650LH	
198	325922-6	SWIVEL, EM2650LH	1
199	413140-9	WASHER, EM2650LH	1
200	266581-6	PAN HEAD SCREW M3X8, EM2650LH	2
201	257964-1	STOP RING E-3, EM2650LH	1
202	213538-8	O RING 2, EM2650LH	1
203	325985-2	JET, EM2650LH	1
204	234183-6	CONICAL COMPRESSION SPRING 5-9, EM2650LH	1
205	442155-9	PUMP GASKET, EM2650LH	1
206	168575-6	PUMP DIAPHRAGM, EM2650LH	1
207	141737-1	N/A	1
	140437-0	PUMP BODY, EM2650LH	
208	352021-1	N/A	1
	352010-6	INLET SCREEN, EM2650LH	
209	442154-1	METERING DIAPHRAGM GASKET, EM2650LH	1
210	168620-7	METERING DIAPHRAGM, EM2650LH	1
211	140438-8	AIR PURGE BODY, EM2650LH	1
212	424314-7	PRIMER PUMP, EM2650LH	1
213	346270-0	PRIMER PUMP COVER, EM2650LH	1
214	266582-4	TAPPING SCREW 3X24, EM2650LH	4
221	638706-6	LEAD UNIT, EM2650UH	1
222	135398-7	PROTECTOR EXTENSION ASS'Y, EM2650UH	1
223	266326-2	TAPPING SCREW PT 4X18, 5007MG	1
224	346074-0	CUTTER, EM2650UH	1
225	819765-1	EM2650UH MODELNO. LABEL, EM2650UH	1
226	819432-8	CAUTION TAG, EM2650LH	1
227	810455-9	CAUTION PLATE, EM2650LH	1
228	800F73-7	N/A	1
	891985-9	INDICATION LABEL, EM2650LH	
	941151-9	F. WASHER 6, 5007NB	1
	941152-7	F. WASHER 6, HM1500	
	443170-6	FELT, EM2650LH	1
	352020-3	SEPARATOR MESH, EM2650LH	1
	453865-3	SEPARATOR CASE, EM2650LH	1
	453862-9	OIL CASE PLATE, EM2650LH	1
	123143-2	BAND ASSEMBLY, EM4250	1
	783013-3	BOX DRIVER 16-17, EM2650UH	1
	783232-1	HEX. WRENCH 5, EM2650UH	1

783223-2	WRENCH 4, EM2650LH	1
831304-7	ACCESSORY BAG, EM2650LH	1
450573-7	TOOL COVER, EM2650UH	2
B-14118	9 STAR BLADE 4T, EM4250	1
195826-4	4ST. ENGINE OIL 10W-30 80CC, EM2650LH	1
195500-4	OIL SET, EM2650LH	
266427-6	TAPPING SCREW 4X12, 5377MG	1
452219-1	CHOKE PLATE, EM2650LH	1
452220-6	CHOKE LEVER, EM2650LH	1
808143-0	INDICATION LABEL, EM2650UH	1