Parts Breakdown

BO5030

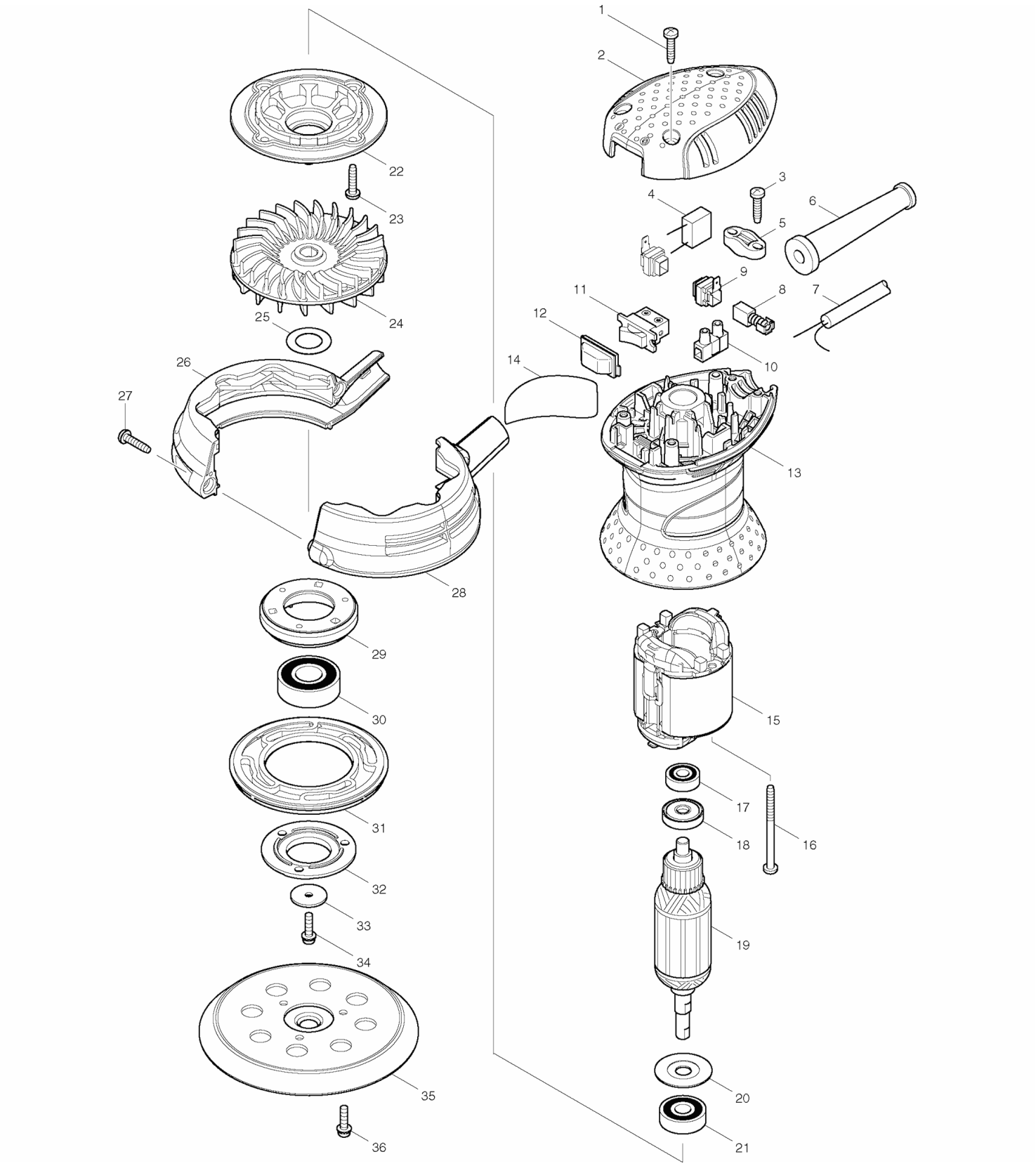

Parts Breakdown

BO5030

Products with multiple versions are listed in subsiding order with the newest version on top not indented

Fig #	Part ID	Part Name	Quantity
1	265995-6	TAPPING SCREW 4X18, BO4556K	3
2	450071-1	TOP COVER, BO4556K	1
3	265995-6	TAPPING SCREW 4X18, BO4556K	2
5	687063-9	STRAIN RELIEF, 4323K	1
6	682502-4	CORD GUARD 8-85, HP2010N	1
7	664064-4	CORD (2X18X8 SJ), BO4556	1
	660002-4	POWER SUPPLY CORD, JN1601	
8	CB407	CARBON BRUSH SET, 195007-0	1
	195007-0	CARBON BRUSH SET, 195007-0	
	191927-6	CARBON BRUSH SET CB-407, BO5030K	
9	643995-0	BRUSH HOLDER, BO4556K	2
11	651527-9	SWITCH, BO4556K	1
12	424039-3	SWITCH COVER, BO4556K	1
13	450671-7	MOTOR HOUSING, B05030K	1
14	865589-3	NAME PLATE, B05030	1
15	633671-4	FIELD 115V, B05030K	1
16	266147-2	TAPPING SCREW 4X55, 6824	2
17	210017-7	BALL BEARING 607DDW, LXPK01	1
18	681652-2	INSULATION WASHER, BO4556	1
19	515731-3	ARMATURE ASS'Y 115V, B05030K	1
20	267806-1	WASHER 9, BO4556K	1
21	211092-6	B. BEARING 629DDW, BO4556	1
22	450672-5	BRACKET, B05030K	1
23	265995-6	TAPPING SCREW 4X18, BO4556K	4
24	241673-2	FAN 88, B05030K	1
25	267164-5	FLAT WASHER 15, BO5030	1
26	188579-2	SKIRT L/R SET, B05030K	1
27	265995-6	TAPPING SCREW 4X18, BO4556K	2
28	188579-2	SKIRT L/R SET, B05030K	1
29	318304-9	BEARING BOX, B5030K	1
30	211228-7	BALL BEARING 6202DDW, HM1303B	1
31	424131-5	BRAKE RING, B05030K	1
32	318303-1	BEARING BOX COVER, B05030K	1
33	253739-6	FLAT WASHER 4, BO5010	1
34	911128-8	P.H. SCREW M4X16, LXPK01	1
35	743081-8	BASE/PAD , BO5030	1
36	911128-8	P.H. SCREW M4X16, LXPK01	3
	166078-4	DUST BAG, BO4556K	1
	257202-1	RING 25, BO4556	1
	416063-0	DUST BAG NOZZLE, BO4556	1
	416064-8	DUST NOZZLE, BO4556	1
	794520-1	5" ABR. D.#120 (5/PKG), BO5001	1
	794544-7	ABRASIVE DISC 125#120, BO5001	
	183782-0	PLASTIC TOOL CASE, BO5030K	
	824562-2	PLASTIC TOOL CASE, BO5021K	1