Parts Breakdown

BDA350

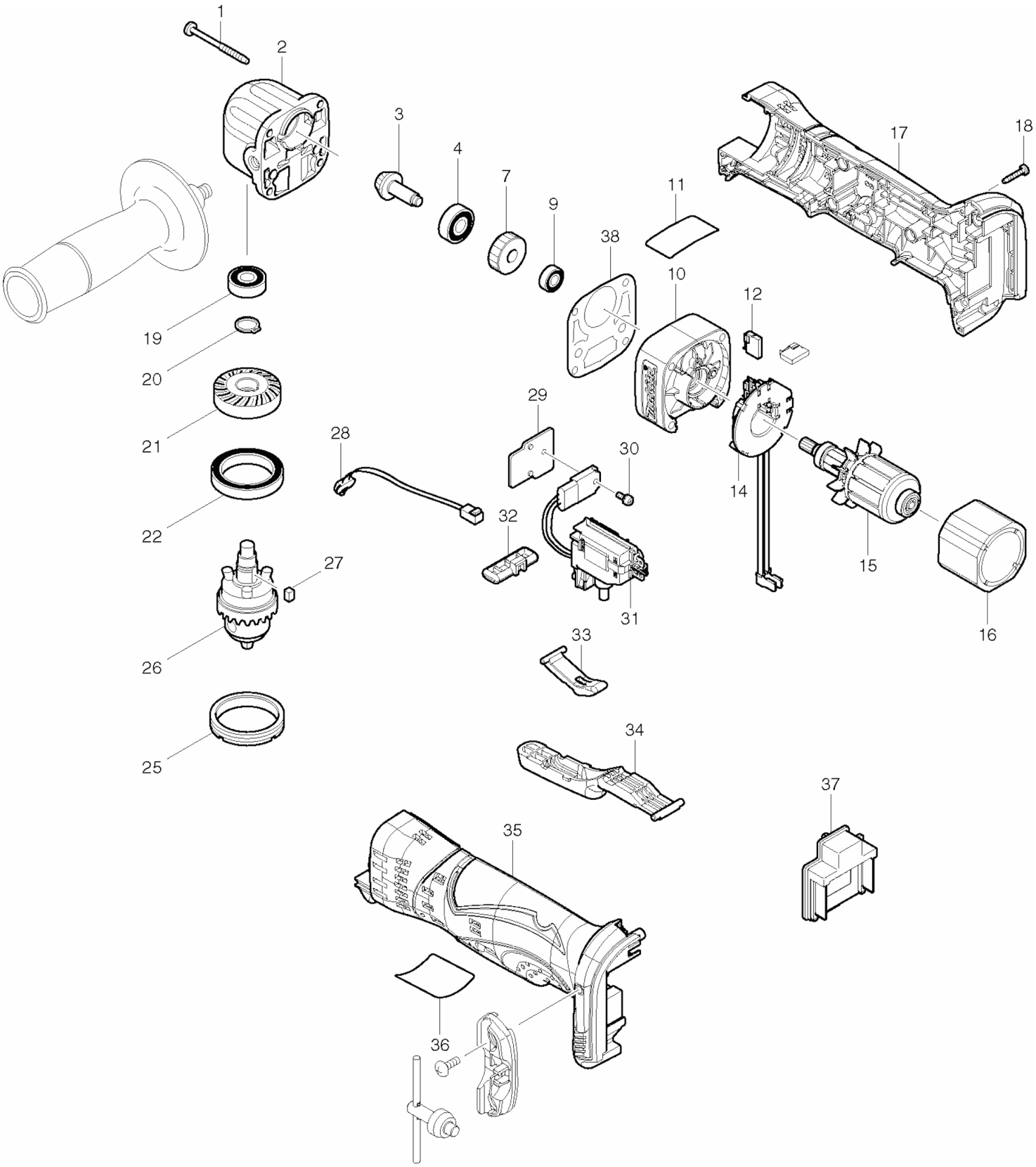

Parts Breakdown

BDA350

Products with multiple versions are listed in subsiding order with the newest version on top not indented

Fig #	Part ID	Part Name	Quantity
1	266069-6	T. SCREW FLANGE PT4X45 HR2410	4
2	317635-3	GEAR HOUSING, DA3010F	1
3	227436-0	SPIRAL BEVEL GEAR 9, DA3010F	1
4	210029-0	BALL BEARING 608ZZ, 5007NK	1
7	227230-0	SPUR GEAR 29, BDA350Z	1
9	210033-9	BALL BEARING 696ZZ, GA4030	1
10	450607-6	GEAR HOUSING COVER, BDA350Z	1
11	810423-2	CAUTION LABEL, BDA350Z	1
12	CB440	CARBON BRUSH SET, 195021-6	1
	195021-6	CARBON BRUSH SET, 195021-6	
	194427-5	CARBON BRUSH SET CB-440, BHP451	
14	539189-2	BRUSH HOLDER ASS'Y, BDA350	1
	638615-9	BRUSH HOLDER, BDA350Z	
15	619234-0	ARMATURE, BDA350Z	1
16	638613-3	YOKE UNIT, BDA350Z, BHP454	1
17	187130-5	HOUSING SET, BDA350Z	1
	188532-8	HOUSING SET, BDA350Z	
18	266130-9	TAPPING SCREW PT3X16, LXPH03	5
19	210029-0	BALL BEARING 608ZZ, 5007NK	1
20	961052-5	RETAINING RING S-12, LS1016L	1
21	227536-6	SPIRAL BEVEL GEAR 26, BDA350Z	1
22	211423-9	BALL BEARING 6806DDW, BDA350Z	1
25	285842-5	BEARING RETAINER 36-43, DA3010F	1
26	763174-5	DRILL CHUCK S10, DA3010F	1
27	254201-4	KEY 4, DA3010F	1
28	631814-2	LED CIRCUIT, BDA350Z	1
29	689098-6	HEAT SINK, 6503DZ	1
30	911006-2	P.H. SCREW M3X8, LXSF01	1
31	638881-8	SWITCH UNIT, BDA350Z	1
	650606-0	SWITCH C3HZ-1A-TPLM, BDA350Z	
32	450610-7	F/R CHANGE LEVER, BDA350Z	1
33	450609-2	LINK, BDA350Z	1
34	450608-4	SWITCH LEVER, BDA350Z	1
35	187130-5	HOUSING SET, BDA350Z	1
	188532-8	HOUSING SET, BDA350Z	
36	865494-4	NAME PLATE, BDA350Z	1
	643838-6	TERMINAL, BDF451	
	643859-8	TERMINAL, LXPH03	
	643812-4	TERMINAL, BDA350	
38	418036-9	GASKET, DA3010F	1
	153489-2	GRIP 36, 9557NB	1
	251314-2	SCREW M4X12, LXPH03	1
	450688-0	KEY HOLDER, BDA350Z	1
	763415-9	CHUCK KEY, DA301DW	1
	***DC18RA	N/A	1
	BL1830	18V LXT LITHIUM-ION BATTERY	2
	195324-8	BATTERY BL1830	
	194205-3	BL1830 BATTERY, BULK	
	450128-8	BATTERY COVER FOR 18V/14.4V LI-ION BATTERY	1
	824851-5	PLASTIC TOOL CASE, BDA350	1