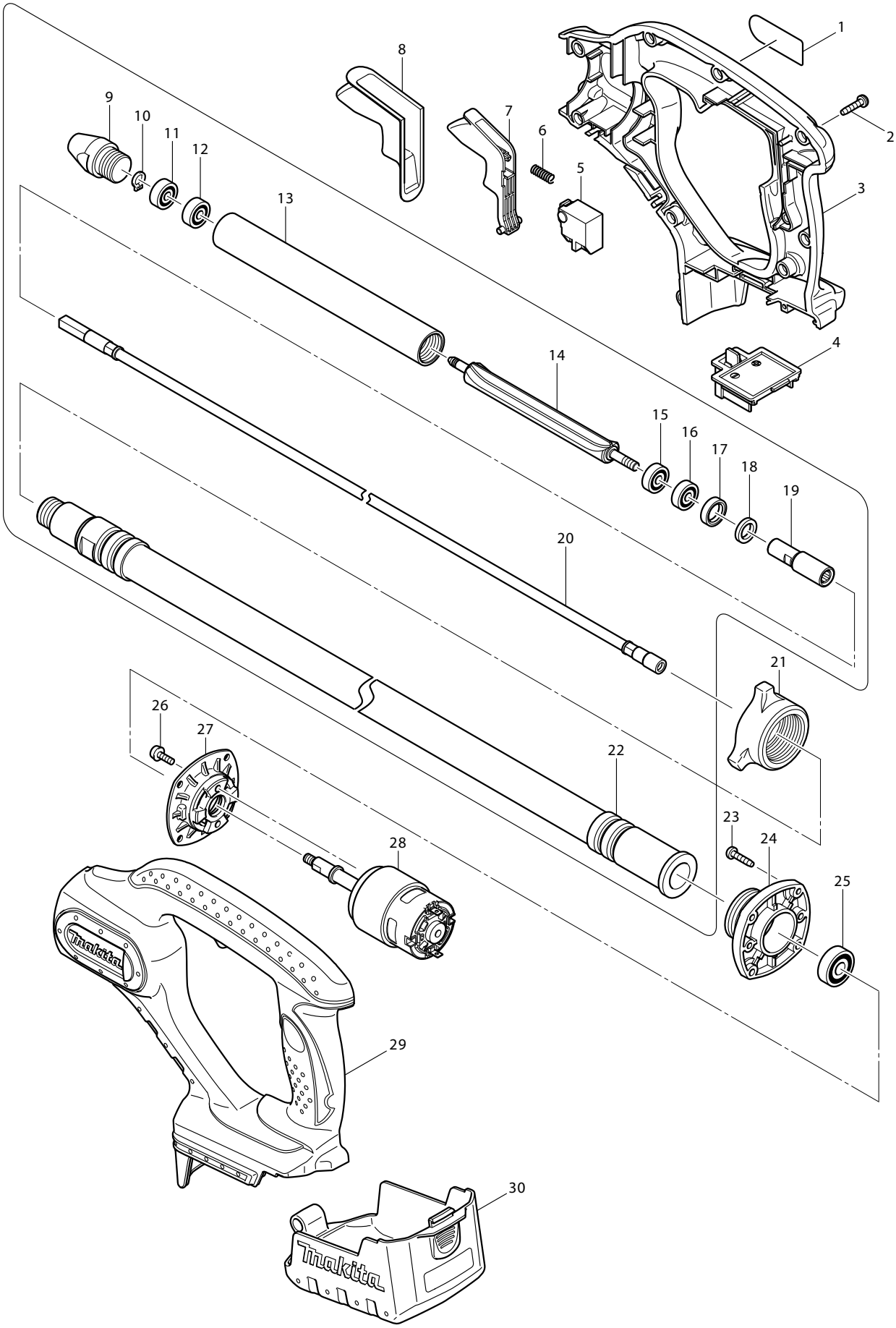
1
2
3
4
5
6
7
8
9
10
11
12
13
14
15
16
17
18
19
20
21
22
23
24
25
26
27
28
29
30

Model BVR450 Parts List

A = Standard Equipment

○= Circuit Diagram

	Fig.		Part No.	Description	Q'ty	Unit
	1		862401-8	NAME PLATE	1	PC.
	2		266045-0	TAPPING SCREW 4X20	9	PC.
	3		188170-6	HOUSING SET	1	SET
		C10	810201-0	CAUTION LABEL	1	PC.
		D10		INC. 29		
	4		643812-4	TERMINAL	1	PC.
	5		650580-2	SWITCH SGE120C-4	1	PC.
	6		231298-0	COMPRESSION SPRING 6	1	PC.
	7		419511-8	SWITCH LEVER	1	PC.
	8		421961-5	WATERPROOF COVER	1	PC.
	9		322935-8	CAP	1	PC.
	10		961002-0	RETAINING RING S-6	1	PC.
	11		210018-5	BALL BEARING 626	1	PC.
	12		210018-5	BALL BEARING 626	1	PC.
	13		331503-6	PIPE 25	1	PC.
	14		322934-0	UNBALANCER	1	PC.
	15		211016-2	BALL BEARING 626LLB	1	PC.
	16		211016-2	BALL BEARING 626LLB	1	PC.
	17		421578-4	RUBBER RING	1	PC.
	18		443101-5	FELT RING	1	PC.
	19		322969-1	JOINT	1	PC.
	20		163420-0	FLEXIBLE WIRE	1	PC.
	21		416244-6	NUT 36	1	PC.
	22		163419-5	FLEXIBLE HOSE	1	PC.
	23		266045-0	TAPPING SCREW 4X20	4	PC.
	24		316893-8	BEARING BOX	1	PC.
	25		210042-8	BALL BEARING 629LLB	1	PC.
	26		911118-1	PAN HEAD SCREW M4X12	2	PC.
	27		318038-4	SUPPORTER	1	PC.
	28		629836-4	DC MOTOR	1	PC.
	29		188170-6	HOUSING SET	1	SET
		C10	810201-0	CAUTION LABEL	1	PC.
		D10		INC. 3		
	30		154948-9	COVER COMPLETE	1	PC.
		C10	810195-9	CAUTION LABEL	1	PC.
A	A01		DC18SC	DC18SC CHARGER	1	
A	A02		194205-3	BATTERY BL1830	2	PC.
A	A03		824768-2	PLASTIC CARRYING CASE	1	PC.
		C10	417383-5	LATCH	2	PC.