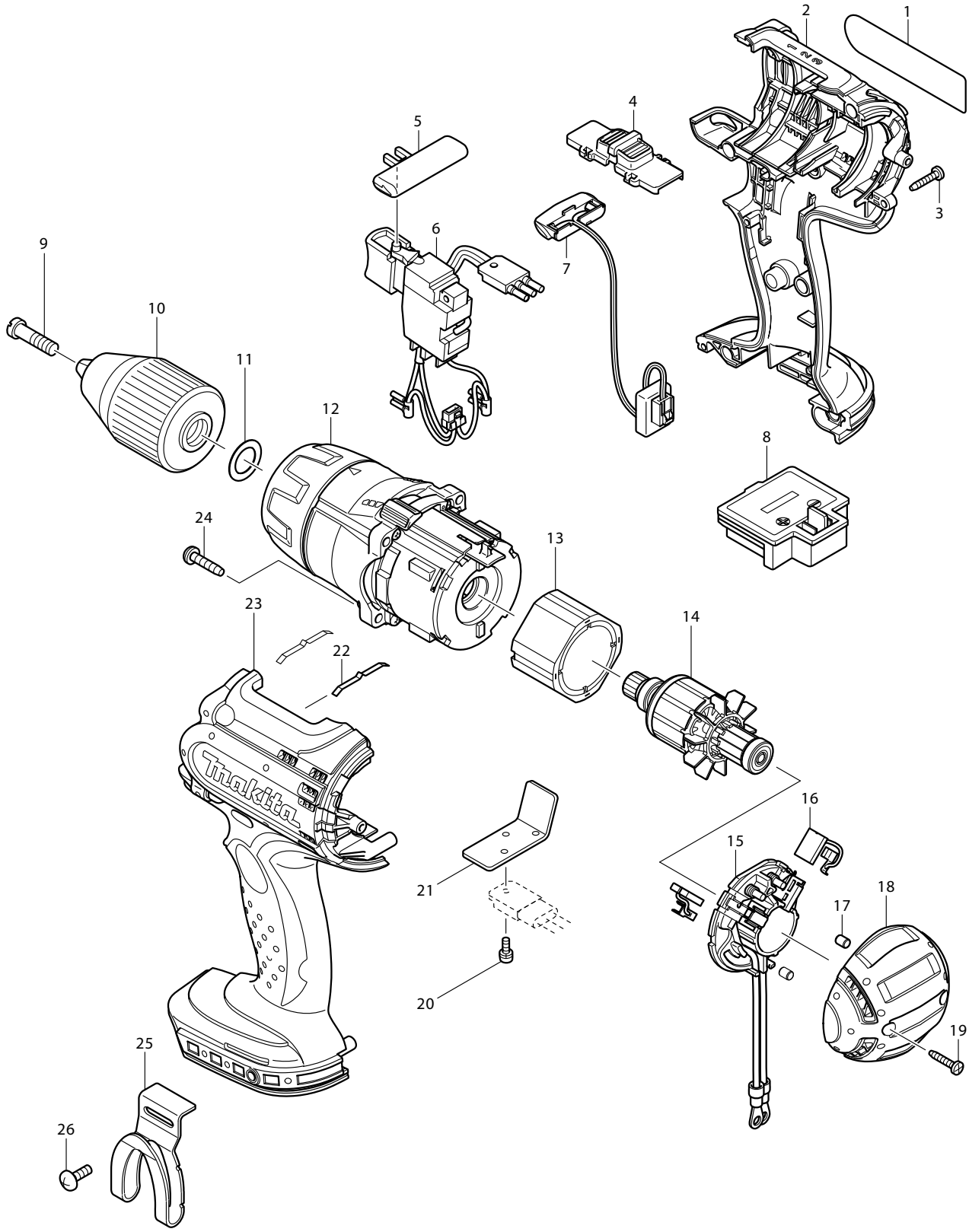
1
2
3
4
5
6
7
8
9
10
11
12
13
14
15
16
17
18
19
20
21
22
23
24
25
26

Model BDF451 Parts List

* = Standard Equipment

	Item No.		Part No.	Description	Q'ty	Unit
	1		861819-0	NAME PLATE BDF451	1	PC.
	2		188031-0	HOUSING SET	1	SET
		D10		INC. 23		
	3		266130-9	TAPPING SCREW BIND PT 3X16	8	PC.
	4		125316-3	SPEED CHANGE LEVER ASS'Y	1	PC.
		C10	233438-6	COMPRESSION SPRING 4	2	PC.
	5		419250-0	F/R CHANGE LEVER	1	PC.
	6		650573-9	SWITCH TG553FSB-4	1	PC.
	7		631692-0	LIGHT CIRCUIT	1	PC.
	8		643812-4	TERMINAL	1	PC.
	9		251468-5	- FLAT HEAD SCREW M6X22	1	PC.
	10		763191-5	KEYLESS DRILL CHUCK 13	1	PC.
	11		253798-0	FLAT WASHER 13	1	PC.
	12		125318-9	GEAR ASS'Y	1	PC.
		C10	418763-8	SPEED CHANGE RING	1	PC.
		C20	268088-8	PIN 1.2	2	PC.
	13		638425-4	YOKE UNIT	1	PC.
	14		619165-3	ARMATURE	1	PC.
	15		638431-9	BRUSH HOLDER COMPLETE	1	PC.
	16		194159-4	CARBON BRUSH SET CB-436	1	SET
	17		263032-0	RUBBER PIN 4	2	PC.
	18		419249-5	REAR COVER	1	PC.
	19		266130-9	TAPPING SCREW BIND PT 3X16	2	PC.
	20		911006-2	PAN HEAD SCREW M3X8	1	PC.
	21		689145-3	HEATSINK	1	PC.
	22		232220-0	LEAF SPRING	2	PC.
	23		188031-0	HOUSING SET	1	SET
		D10		INC. 2		
	24		266045-0	TAPPING SCREW 4X20	4	PC.
	25		324553-8	HOOK	1	PC.
	26		251314-2	+ SCREW M4X12	1	PC.
*	A01		122749-3	GRIP ASS'Y	1	PC.
		C10	154835-2	GRIP36 COMPLETE	1	PC.
		C20	266349-0	SQUARE BOLT M8X50	1	PC.
		C30	345463-6	GRIP SPRING 60	1	PC.
		C40	418768-8	GRIP BASE	1	PC.
*	A02		251314-2	+ SCREW M4X12	1	PC.
*	A03		419276-2	BIT HOLDER	1	PC.
*	A04		DC18SC	DC18SC CHARGER	1	PC.
*	A05		194205-3	BATTERY BL1830 SET	2	PC.
*	A06		784637-8	+- BIT 2-45	2	PC.
*	A07		824754-3	PLASTIC CASE	1	PC.
		C10	419216-0	HANDLE	1	PC.
		C20	417724-5	LATCH	2	PC.
		C30	419268-1	PLASTIC CASE LID	1	PC.
		C40	419269-9	PLATE	5	PC.
		C50	324667-3	SHAFT	1	PC.